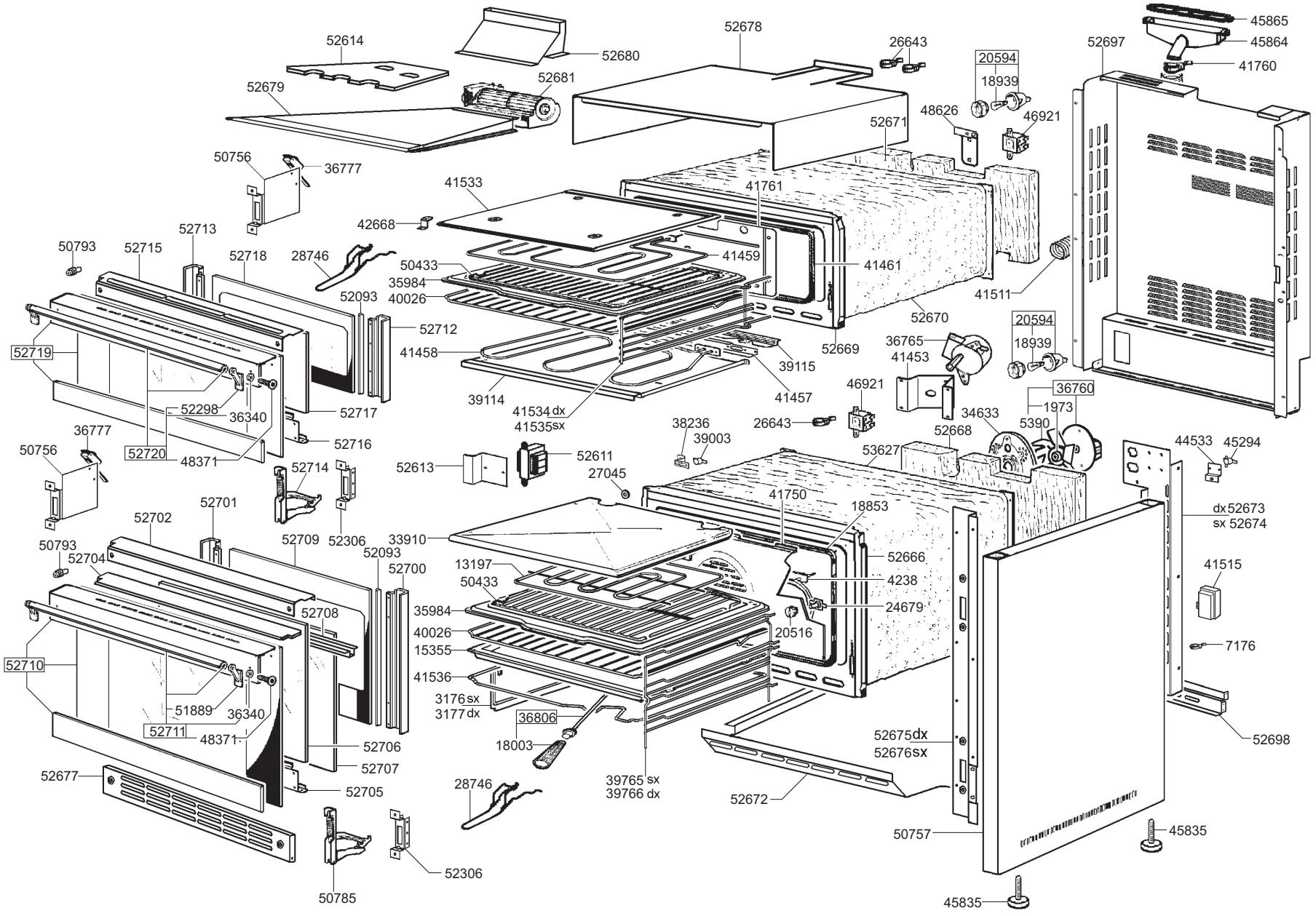
52614
52680
52678
26643
20594
18939
52697
45865
45864
41760
52679
52681
48626
46921
52671
50756
36777
41533
41761
42668
52713
50793
52715
52718
28746
50433
41459
41461
35984
40026
52093
41511
52712
52670
52719
41458
52669
36765
41453
39115
39114
41534 dx
41535 sx
41457
46921
36760
52298
36340
52717
1973
5390
34633
36777
26643
38236
39003
52668
44533
45294
50756
52720
48371
52716
52613
52611
53627
52714
27045
41750
18853
dx 52673
sx 52674
52702
52701
52709
52306
33910
50793
52704
52093
52700
13197
52666
41515
50433
4238
52708
35984
24679
40026
20516
7176
15355
52710
41536
3176 sx
3177 dx
51889
36340
36806
52711
48371
18003
52706
52675 dx
52676 sx
52698
52707
52677
52705
28746
39765 sx
39766 dx
52672
50757
45835
52306
50785
45835

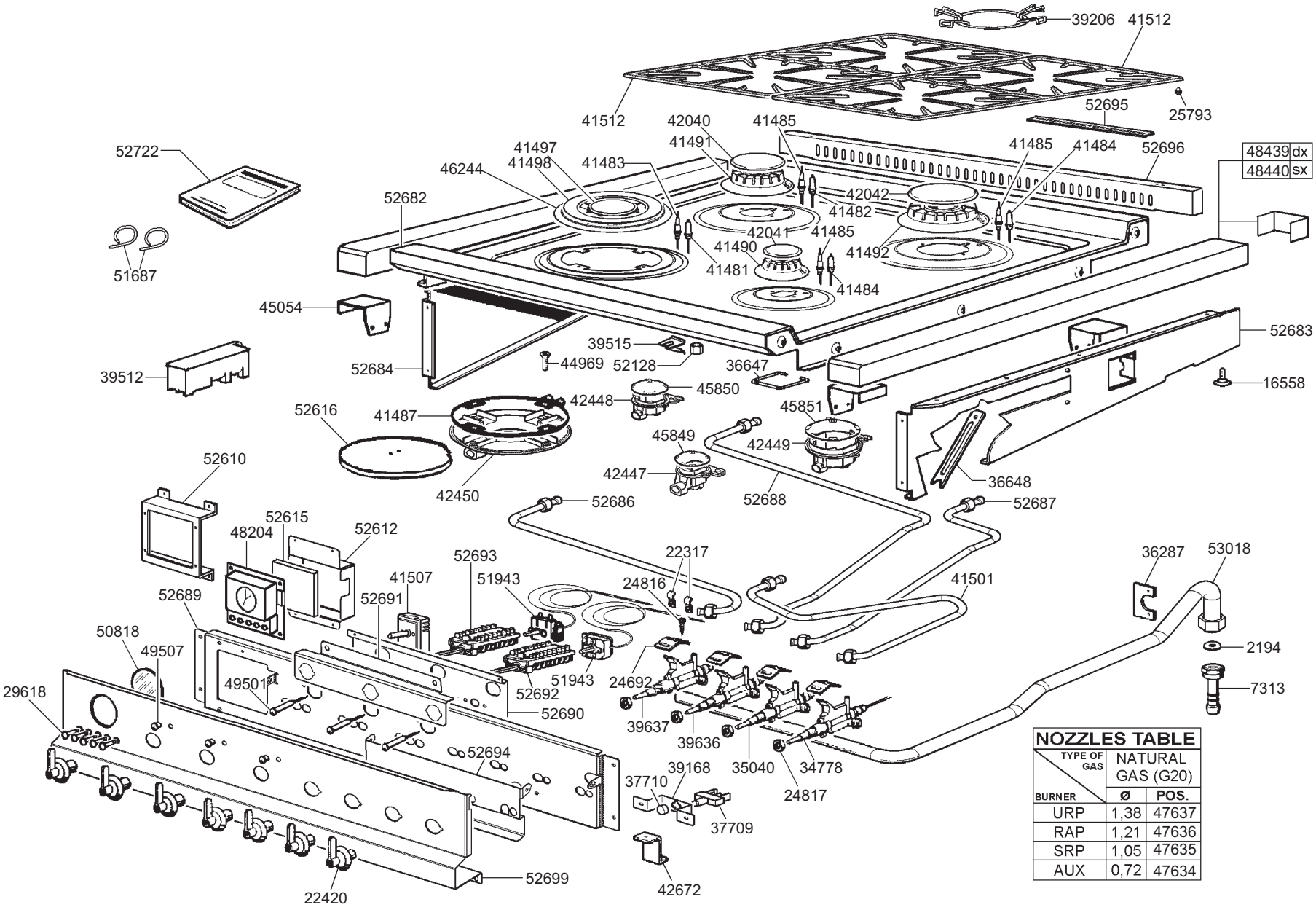

NOZZLES TABLE

TYPE OF GAS / BURNER	NATURAL GAS (G20) Ø	POS.
URP	1,38	47637
RAP	1,21	47636
SRP	1,05	47635
AUX	0,72	47634